CATEGORY	DESCRIPTION	P/N #
CONNECTOR	USB 3.1 TYPE C	UBCF-XXX11-SRH001

REV.	ECN NO	DESCRIPTION	REVISED	DATE
A01	———	New Release	KELLY	2015.4.16

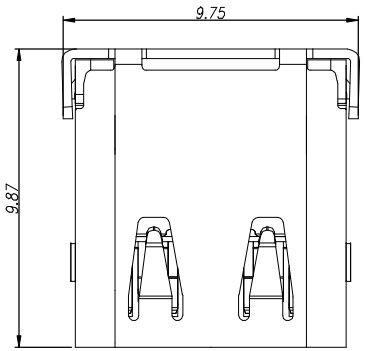

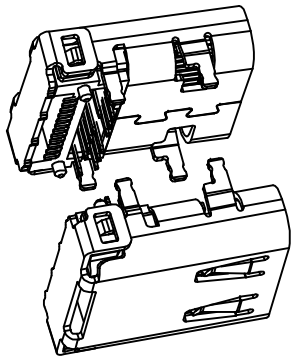

NOTES:

SPECIFICATION:

1. CURRENT RATING: 3.0A MAX
2. VOLTAGE: 100 VAC
3. TEMPERATURE RANGE: -30 °C ~ 85 °C
4. CONTACT RESISTANCE: 40 MILLIONHM MAX
5. INSULATION RESISTANCE: 100 MEGOHMS MIN.
6. LNSERTION FORCE : 5N~20N
7. UNMATING FORCE: 8N~20N
8. DURABILITY: 10,000 CYCLES

UBCF-XXX11-SRH001

Table 1

X	屏蔽壳材质
C	Brass
s	Spcc

Table 2

X	塑胶颜色区分
B	BLACK
W	WHITE
U	BLUE

Table 3
Material & Plating

X	Terminal Plating
0	Au 1u" Plating
1	Au 3u" Plating
2	Au 6u" Plating
3	Au 15u" Plating
4	Au 30u" Plating

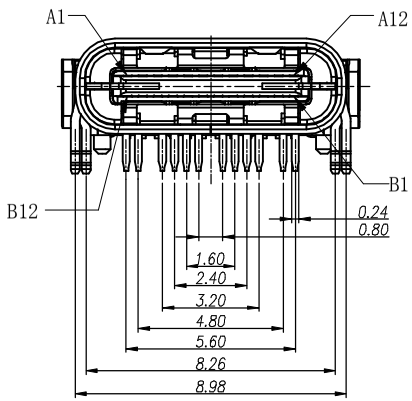

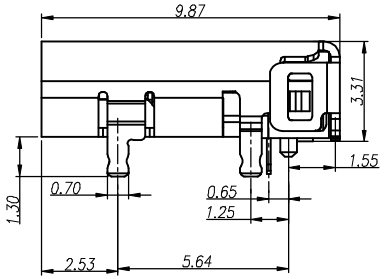

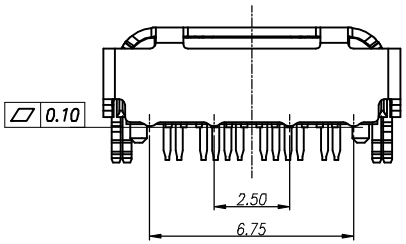

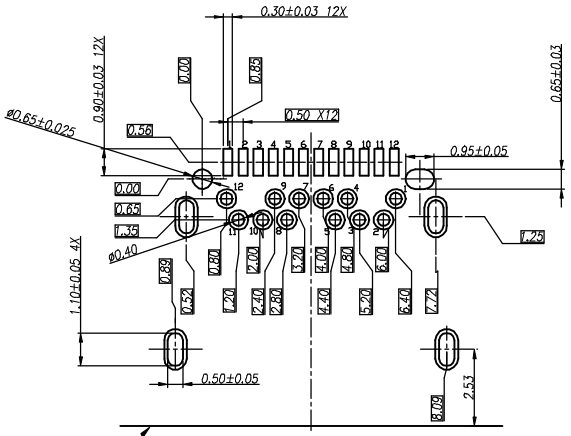

CONNECTOR FRONT EDCE

RECOMMENDED P.C.B. LAYOUT (T:1.00mm)
TOLERANCE UNSPECIFIED ±0.05mm

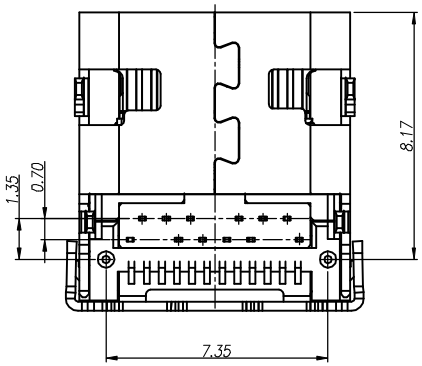

A1	GND	B12	GND
A2	SSTXP1	B11	SSRXP1
A3	SSTXN1	B10	SSRXN1
A4	VBUS	B9	VBUS
A5	CC1	B8	SBU2
A6	DP1	B7	DN2
A7	DN1	B6	DP2
A8	SBU1	B5	CC2
A9	VBUS	B4	VBUS
A10	SSRXN2	B3	SSTXN2
A11	SSRXP2	B2	SSTXP2
A12	GND	B1	GND
PIN	SIGNAL NAME	PIN	SIGNAL NAME

NO.	DESCRIPTION	MATERIAL	REMARKS	QTY
5	SHELL	STAINLESS STEEL	NI Plated	1PCS
4	SPRING	STAINLESS STEEL	---	1PCS
3	SHIELDING PLATE	STAINLESS STEEL	NI Plated	1PCS
2	CONTACT	COPPER ALLOY	Au/NI Plated	1SET
1	HOUSING	HIGH TEMPERATURE PLASTIC	BLACK	1PCS

東莞市合陵電子有限公司
DongGuan HeLing Electronic Co.,LTD

UNLESS OTHERWISE SPECIFED TOLERANCES	SCALE:1/1	UNIT: mm	DWG.NO:
	SIZE: A3	PAGE:1 OF 1	REV:A01

DECIMALS: X :±0.5 X.X :±0.38 X.XX :±0.25
ANGLES: X :±2° X.X :±1°

APPROVED BY	CHECKED BY	PREPARED BY
TNOY	BILL	KELLY

CUSTOMER COPY